MaxiMet

GMX400 Compact Weather Station

The MaxiMet range of compact weather stations is designed and manufactured by Gill Instruments. MaxiMet products use reliable, high quality instruments to provide accurate meteorological information in a wide variety of applications.

GMX400 Features

Temperature, humidity, pressure. A combined instrument mounted inside three double louvered, naturally aspirated radiation shields with no moving parts. The results are high performance across each measurement over long periods of time.

Precipitation. An integrated optical rain gauge that automatically senses water hitting its outside surface and provides measurements based on the size and number of drops. Algorithms interpret this data and simulate the output of a tipping bucket rain gauge in a serial format. The optical rain gauge has no moving parts associated with tipping bucket gauges.

TEMP, HUMIDITY & PRESSURE	PRECIPITATION	PARAMETERS
▪ Air Pressure / Temperature ▪ Relative / Absolute humidity ▪ Naturally aspirated UV stable radiation shield ▪ Protection against wind-blown precipitation/dust	▪ Rainfall total ▪ Rainfall intensity ▪ Rainfall Y/N ▪ Emulated tipping bucket ▪ Integrated heater ▪ No moving parts	▪ Temperature *°C / °F / °K* ▪ Relative humidity *% Rh* ▪ Barometric pressure *hPa, mbar, mm Hg, In Hg* ▪ Absolute humidity *g/m³* ▪ Precipitation *mm/hr, mm/total, in/hr, in/total* ▪ Outputs *RS232, 422, 485 (ASCII), SDI-12, NMEA, MODBUS, Analogue (option)*

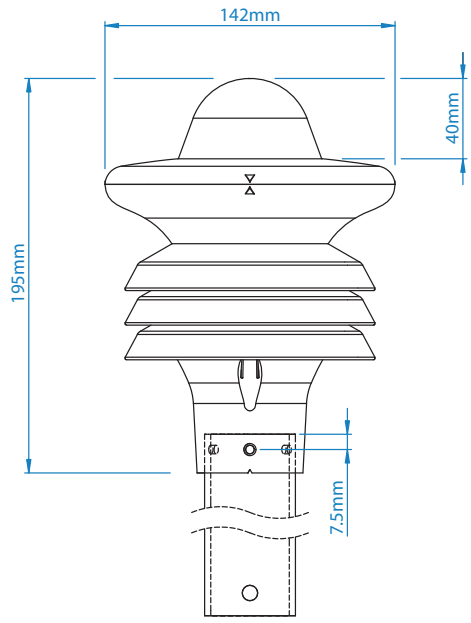

All MaxiMet Models Feature

- Quality Measurements
- Lightweight and Robust
- Low Power Mode
- Free of Charge Software
- Gill Proven Reliability
- Compact Integrated Design
- Real Time Output
- Easy Installation
- Gill Customer Support
- 2 Year Warranty

* Please see the manual for a full list of derived parameters

Applications

- Building and Industrial Controls
- Authorities
- Transport
- Coastal
- Agricultural
- Safety
- Educational
- Commercial
- Energy

TEMPERATURE	
Range	-40°C to +70°C
Resolution	0.1
Accuracy	± 0.3°C @ 20°C
Sampling Rate	1 Hz
Units	°C, °F, °K

PRESSURE	
Range	300 to 1100 hpa
Resolution	0.1 hPa
Accuracy	± 0.5 hPa @ 25°C
Sampling Rate	1 Hz
Units	hPa, mbar, mmHg, inHg

OUTPUTS	
Output rate	1/s, 1/min, 1/hr
Digital Comms Modes	Serial RS232, RS422, RS485, SDI-12, NMEA, MODBUS, ASCII
Analogue Outputs	Available via separate optional device

HUMIDITY	
Range	0-100%
Resolution	1%
Accuracy	± 2% @ 20°C (10%-90% RH)
Sampling Rate	1 Hz
Units	% Rh, g/m^3

PRECIPITATION	
Measurement type	Optical
Range	0 to >300 mm/hr
Precipitation Resolution	0.2 mm
Repeatability	3%
Sampling Rate	1 Hz
Units	mm/hr, mm/total, mm/24 hr, in/hr, in/total, in/24 hr
Heating	YES

POWER	
Power Supply	5 to 30 Vdc
Power (Nominal) 12 Vdc	45 mA continuous high mode. 0.7 mA eco-power mode (1 hour polled)

DEW POINT	
Range	-40°C to +70°C
Resolution	0.1
Accuracy	± 0.3°C @ 20°C
Units	°C, °F, °K
Sampling Rate	1 Hz

ENVIRONMENTAL CONDITIONS	
IP Rating	66
Operational Temperature Range:	-40°C to +70°C
EMC Standard:	BS EN 61326 : 2013 FCC CFR47 parts 15.109
CE Marking	YES
RoHS compliant	YES
Weight	0.5 Kg
Origin	UK

Specifications may be subject to change without prior notice

Gill Instruments Limited
Saltmarsh Park, 67 Gosport Street
Lymington, Hampshire SO41 9EG
United Kingdom

Tel: +44 (0) 1590 613 500
Fax: +44 (0) 1590 613 501
contact@gillinstruments.com

LOMBARD & MAROZZINI

Via Alberico Albricci 9/11 - 00135 Roma
Tel: +39 0636301456 / 06 89871120
Fax: 06 2393698 - Mob: +39 329 3536448
Email: info@lombardemarozzini.com
www.lombardemarozzini.com

nqa. ISO 9001 Registered

gillinstruments.com

1957-007 Iss 5

Copyright © Gill Instruments 2017

Gill Instruments Limited, Reg No. 2281574
Registered Office: The George Business Centre, Christchurch Road, New Milton, BH25 6QJ